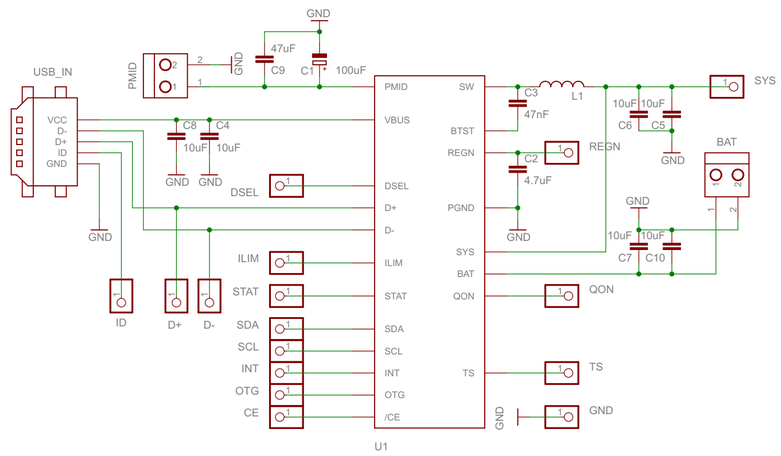
USB_IN
VCC
D-
D+
ID
GND
PMID
GND
47uF
C9
C1
100uF
C8
C4
10uF
10uF
DSEL
ILIM
STAT
SDA
SCL
INT
OTG
CE
ID
D+
D-
PMID
VBUS
DSEL
D+
D-
ILIM
STAT
SDA
SCL
INT
OTG
/CE
SW
BTST
REGN
PGND
SYS
BAT
QON
TS
GND
U1
C3
47nF
L1
C2
4.7uF
REGN
10uF
10uF
C6
C5
GND
SYS
BAT
GND
10uF
10uF
C7
C10
QON
TS
GND